GUIDELINES FOR SIZING WATER HEATERS

California Conference of Directors of Environmental Health
September, 1995

I. BACKGROUND

A critical factor in preventing foodborne illnesses in a food facility is the provision of an adequate supply of hot water for the washing of hands, utensils, equipment, and the facility itself. The installation of a properly sized water heater will ensure that a sufficient amount of hot water will be available at all times.

II. PURPOSE

The purpose of these guidelines is to provide a set of criteria that will assist architects, designers, contractors and owners in properly sizing water heaters to adequately meet the anticipated hot water demands of food facilities in California.

Food facilities with water heaters sized according to these criteria should be capable of complying with the requirements for providing an adequate hot water supply as required by the California Uniform Retail Food Facilities Law.

III. LEGAL AUTHORITY

California Health and Safety Code, Chapter 4, Article 8, Sections 27623, 27624, 27625, 27627, and 27627.3.

IV. DEFINITIONS

- **Booster Heater:** An instantaneous water heater designed and intended to raise the temperature of hot water to a higher temperature for a specific purpose, such as for the sanitizing rinse on a high temperature automatic dishmachine.

- **BTU (British Thermal Unit):** The quantity of heat required to raise the temperature of one pound of water one degree Fahrenheit.

- **GPH (Gallons Per Hour):** The amount of water, in gallons, that is used each hour by the plumbing fixtures and equipment, such as dishmachines.

- **GPM (Gallons Per Minute):** The amount of water, in gallons, flowing through a plumbing fixture or through an instantaneous water heater per minute.

- **Instantaneous Water Heater:** A water heater that generates hot water on demand.

- **KW (Kilowatt):** A unit of electric power equal to 1,000 watts.

- **Rise:** The temperature of water as it leaves the water heater minus the temperature of the water entering the water heater.

- **Storage Water Heater:** A water heater that incorporates a thermostat, a storage tank, and a burner or heating elements, to heat and maintain the water within the tank at a specific temperature.
- **Thermal Efficiency:** The measure of the overall efficiency of the water heater, taking

into consideration loss of energy due to combustion, radiation, convection and conduction of heat from the unit.

V. GENERAL REQUIREMENTS

A. A water heater shall be provided which is **capable** of generating an adequate supply of hot water, at a temperature of at least 120° Fahrenheit, to all sinks, janitorial facilities, and other equipment and fixtures that use hot water, at all times.

B. Water heaters and their installation must be in compliance with all local building code requirements.

C. Water heaters that use reclaimed heat from equipment to heat water must be evaluated on a case by case basis.

VI. SIZING REQUIREMENTS FOR STORAGE WATER HEATERS

A. For food facilities that utilize multiservice eating and drinking utensils, the water heater shall have a recovery rate equal to or greater than 100% of the computed hourly hot water demand, in gallons per hour (GPH).

B. For food facilities that use only single-service eating and drinking utensils, or don't use utensils at all, the water heater shall have a recovery rate equal to or greater than 80% of the computed hourly hot water demand, in GPH.

C. For food facilities that handle and sell **only** prepackaged foods, a water heater with a minimum storage capacity of ten gallons must be provided.

D. The hourly hot water demand for the food facility, in GPH, is calculated by adding together the estimated hot water demands for all sinks and other equipment, such as dishmachines, which utilize hot water. The estimated hot water demands for sinks and other equipment that utilize hot water are listed in Appendix I. The hot water demands for automatic warewashers, such as dishmachines, glasswashers, and potwashers are found in NSF International listings or listings established by other nationally recognized testing laboratories.

E. The following examples are provided to explain how to calculate the total hourly hot water demand:

1. Food facility that utilizes only single service eating and drinking utensils:

Assume:

1 18" X 18" three compartment sink	42 GPH
2 hand lavatories	10 GPH (5 GPH each)
1 janitorial sink	15 GPH
	67 GPH total hourly hot water demand

67 GPH X 80% allowance for single service utensils = 54 GPH
For the food facility in this example, a water heater would be required which will recover 54 GPH.

2. Food facility that utilizes multiservice eating and drinking utensils:
   Assume:

1 18" X 18" three compartment sink	42 GPH
automatic dishmachine	80 GPH
hand spray pre-rinse	45 GPH
one compartment food preparation sink	5 GPH
2 hand lavatories	10 GPH (5 GPH each)
1 janitorial sink	15 GPH
	197 GPH total hourly hot water demand

Since the food facility in this example uses multiservice eating and drinking utensils, 100% of the computed hourly hot water demand must be provided. Therefore, a water heater would be required which will recover 197 GPH.

F. To compute a BTU or KW rating for the required hourly hot water demand found in example #1 the following formulas should be used:

Formula 1 (for gas water heaters)

$$\text{BTU input} = \frac{\text{GPH} \times {}^\circ\text{Rise}^{1} \times 8.33 \text{ lb./ gallon of water}}{\text{Thermal Efficiency}^{2}}$$

$$\text{BTU input} = \frac{54 \text{ GPH} \times 50^\circ\text{F} \times 8.33 \text{ lb.}}{.75}$$

$$\text{BTU input} = 29{,}988$$

[1] The average temperature of tap water varies throughout the State depending upon the location, elevation, and time of year. In order to properly size the water heater check with your local health agency to determine the required rise. For the purposes of these guidelines a tap water temperature of 70° Fahrenheit will be used. Therefore, to achieve a temperature of 120° Fahrenheit at the faucet, the required rise would be 50°.

[2] The thermal efficiency for gas water heaters, unless otherwise listed by NSF International or other nationally recognized testing laboratories, will be assumed to be 75%.

Formula 2 (for electric water heaters)

$$\text{KW input} = \frac{\text{GPH} \times {}^\circ\text{Rise} \times 8.33 \text{ lb./ gallon of water}}{\text{Thermal Efficiency}^{1} \times 3412 \text{ BTU/KW}}$$

$$\text{KW input} = \frac{54 \text{ GPH} \times 50^\circ\text{F} \times 8.33 \text{ lb.}}{.98 \times 3412 \text{ BTU/KW}}$$

$$\text{KW input} = 6.7$$

[1] The thermal efficiency for electric water heaters, unless otherwise listed by NSF International or other nationally recognized testing laboratories, will be assumed to be 98%.

Sizing tables for gas and electric water heaters are found in Appendices II and III respectively.

VII. SIZING REQUIREMENTS FOR INSTANTANEOUS WATER HEATERS

A. One of the advantages of an instantaneous water heater is its ability to provide a continuous supply of hot water. However, since the water passes through a heat exchanger, the water must flow through the unit slowly to ensure proper heat transfer. Therefore, the quantity, or rate, at which the hot water is delivered can be significantly less than that provided by a storage water heater. When hot water is utilized at several locations of the food facility at the same time the flow of hot water to each fixture can be severely restricted. As a result of the restricted output of instantaneous water heaters, more than one unit may be required, depending on the numbers and types of sinks and equipment present. Due to the limitations inherent in the design of instantaneous water heaters, some local health agencies may restrict or prohibit their usage. Check with your local health agency prior to installing an instantaneous water heater in order to determine their requirements.

B. Instantaneous water heaters must be sized to provide hot water of at least 120° Fahrenheit, and at a rate of at least two gallons per minute (GPM), to each sink and fixture that utilizes hot water. (Note: Hand lavatories must receive at least 1/2 GPM.) The following example is provided to explain how this sizing criteria is applied:

Assume:

1 18" X 18" three compartment sink	2 GPM
2 hand lavatories	1 GPM (1/2 GPM each)
1 janitorial sink	2 GPM
	5 GPM

C. In the example given above, one or more instantaneous water heaters would have to be provided in order to supply a total of at least 5 GPM.

D. Food facilities that install an automatic warewashing machine that utilizes a large quantity of hot water may be required to provide an instantaneous water heater exclusively for the warewashing machine. NSF International listings or listings established by other nationally recognized testing laboratories are used to determine the minimum GPM hot water demand for automatic warewashing machines.

VIII. REQUIREMENTS FOR BOOSTER HEATERS

A. When a hot water sanitizing warewashing machine is used, a booster heater must be provided that will raise the incoming general purpose hot water up to at least 180° Fahrenheit for the final sanitizing rinse cycle.

B. When sizing a booster heater, the hot water demand for the warewashing final sanitizing rinse cycle should be obtained from the NSF International listings or listings established by other nationally recognized testing laboratories.

C. The formulas for calculating BTU or KW input listed in section VI.F. should be used when determining the minimum required size for a booster heater.

D. When a booster heater is installed below a drainboard, it shall be installed at least six inches above the floor and away from the wall, and in a manner that will allow accessibility for proper cleaning and servicing.

IX. RECIRCULATION PUMPS

A. Where fixtures are located more than sixty feet from the water heater, a recirculation pump must be installed, in order to ensure that water reaches the fixture at a temperature of at least 120° Fahrenheit.

B. In some cases it may be more practical to install a separate, smaller water heater for remote fixtures, such as for restroom handsinks.

X. INSTALLATION REQUIREMENTS

A. Where feasible, water heaters should be located in an area of the food facility separated from all food and utensil handling areas.

B. The Uniform Building Code prohibits the installation of gas water heaters in restrooms or change rooms.

C. Water heaters shall be mounted in one of the following manners:
   1. On six inch high, easily cleanable legs.
   2. On a four inch high coved curb base. All openings between the water heater and the base must be sealed in a watertight manner.
   3. On a properly finished and installed wall pedestal, positioned so that it is out of the work and traffic space.
   4. In an easily accessible location above a suspended ceiling. Where a permanently installed ladder is required to access the water heater, the ladder shall not be installed above a food or utensil handling area.

   Note: The local health agency may allow alternate installation methods when a water heater is installed in an area separated from food and utensil handling areas, such as in a mechanical room.

D. A common mistake with electric water heaters is the ordering and installing of a water heater with an upper element of 4500 watts, a bottom element of 4500 watts, and a total connected (or maximum) wattage of 4500 watts. On such a water heater only one element is operating at any one time. Many individuals do not observe the total connected wattage and assume that because each of the elements is 4500 watts their water heater has an input rating of 9000 watts.

   Water heater manufacturers have specific procedures for rewiring an electric water heater so that the upper and lower elements are operating simultaneously. Some manufacturers only permit rewiring in the factory. Field modifications will normally void warranties and any listings that the unit comes with. Prior to acceptance of a field modified water heater, the local health agency should ensure that the modifications were performed according to the manufacturer's recommendations and with the approval of the local building officials. The data plate on a field modified water heater

must be changed to reflect the total connected wattage rating with both elements operating simultaneously.

E. When multiple water heaters are connected, they must be installed in parallel, not in series (See Appendix IV).

July 21, 1995

APPENDIX II

SIZING TABLE FOR GAS WATER HEATERS

Gallons Per Hour Delivery At Indicated Temperature Rise

BTU (X 1000)	40°F	50°F	60°F	70°F
5	11	9	8	6
10	23	18	15	13
15	34	27	23	19
20	45	36	30	26
25	56	45	38	32
30	68	54	45	39
35	79	63	53	45
40	90	72	60	51
45	101	81	68	58
50	113	90	75	64
55	124	99	83	71
60	135	108	90	77
65	146	117	98	84
70	158	126	105	90
75	169	135	113	96
80	180	144	120	103
85	191	153	128	109
90	203	162	135	116
95	214	171	143	122
100	225	180	150	129
105	236	189	158	135
110	248	198	165	141
115	259	207	173	148
120	270	216	180	154
125	281	225	188	161
130	293	234	195	167
135	304	243	203	174
140	315	252	210	180
145	326	261	218	187
150	338	270	225	193
155	349	279	233	199
160	360	288	240	206
165	371	297	248	212
170	383	306	255	219
175	394	315	263	225
180	405	324	270	232
185	416	333	278	238
190	428	342	285	244
195	439	351	293	251
200	450	360	300	257
205	461	369	308	264
210	473	378	315	270
215	484	387	323	277
220	495	396	330	283
225	506	405	338	289
230	518	414	345	296
235	529	423	353	302
240	540	432	360	309
245	551	441	368	315
250	563	450	375	322

APPENDIX III

SIZING TABLE FOR ELECTRIC WATER HEATERS

Gallons Per Hour Delivery At Indicated Temperature Rise

KW	40°F	50°F	60°F	70°F
1	10	8	7	6
2	20	16	13	11
3	30	24	20	17
4	40	32	27	23
5	50	40	33	29
6	60	48	40	34
7	70	56	47	40
8	80	64	54	46
9	90	72	60	52
10	100	80	67	57
11	110	88	74	63
12	120	96	80	69
13	130	104	87	75
14	141	112	94	80
15	151	120	100	86
16	161	128	107	92
17	171	136	114	97
18	181	145	120	103
19	191	153	127	109
20	201	161	134	115
21	211	169	141	120
22	221	177	147	126
23	231	185	154	132
24	241	193	161	138
25	251	201	167	143
26	261	209	174	149
27	271	217	181	155
28	281	225	187	161
29	291	233	194	166
30	301	241	201	172
31	311	249	207	178
32	321	257	214	184
33	331	265	221	189
34	341	273	227	195
35	351	281	234	201
36	361	289	241	206
37	371	297	248	212
38	381	305	254	218
39	391	313	261	224
40	401	321	268	229
41	411	329	274	235
42	422	337	281	241
43	432	345	288	247
44	442	353	294	252
45	452	361	301	258
46	462	369	308	264
47	472	377	314	270
48	482	385	321	275
49	492	393	328	281
50	502	401	335	287

APPENDIX IV
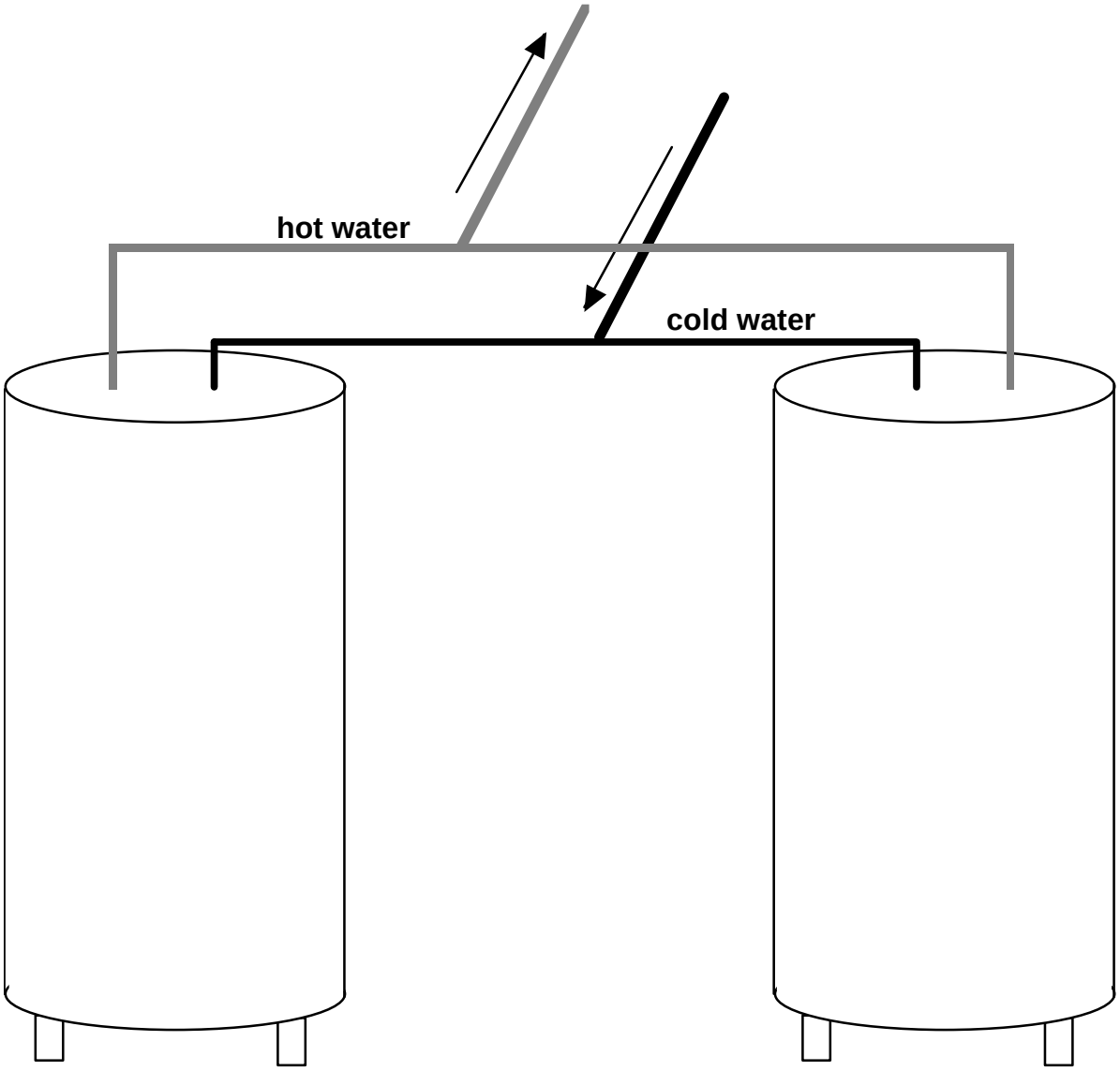
Water Heaters Installed In Parallel